To Order, Call : 1-905-884-5250
Internet : www.rfmote.com
Email : info@rfmote.com

4” EXHAUST FAN
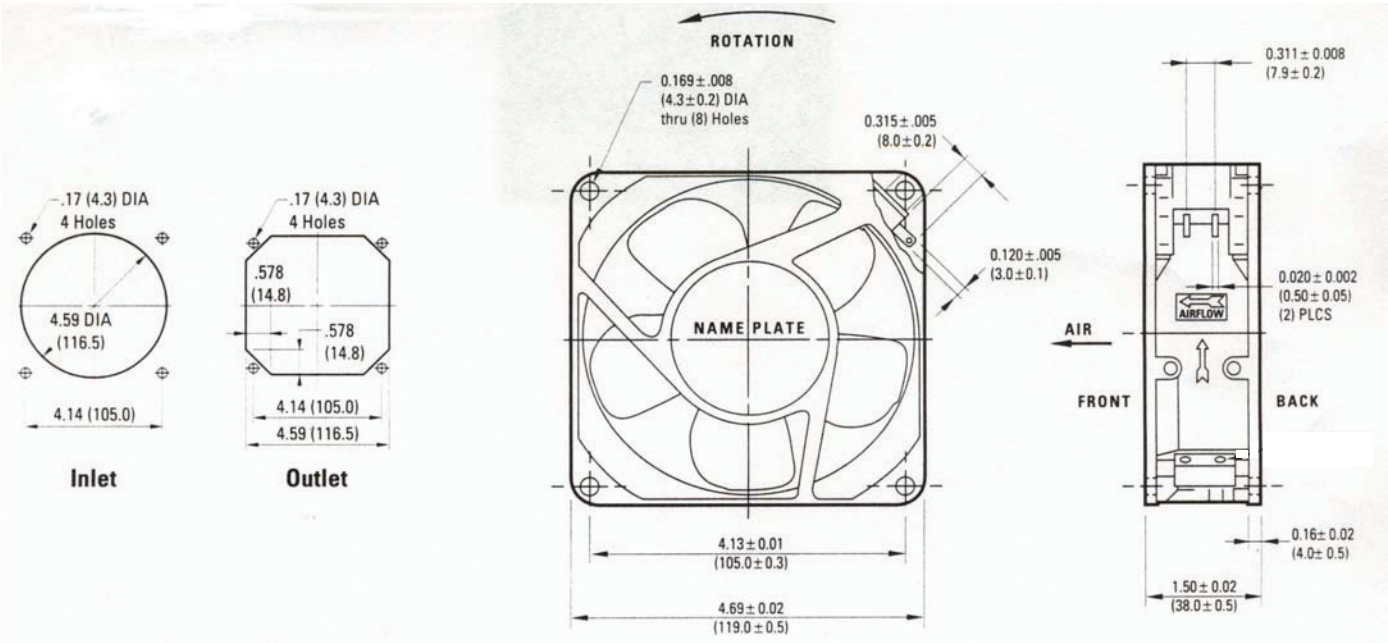
PART NUMBER	AIRFLOW
RFM-1-FAN	105 CFM
RFM-2-FAN	210 CFM
RFM-4-FAN	420 CFM