To Order, Call : 1-905-884-5250
Internet : www.rfmote.com
Email : info@rfmote.com
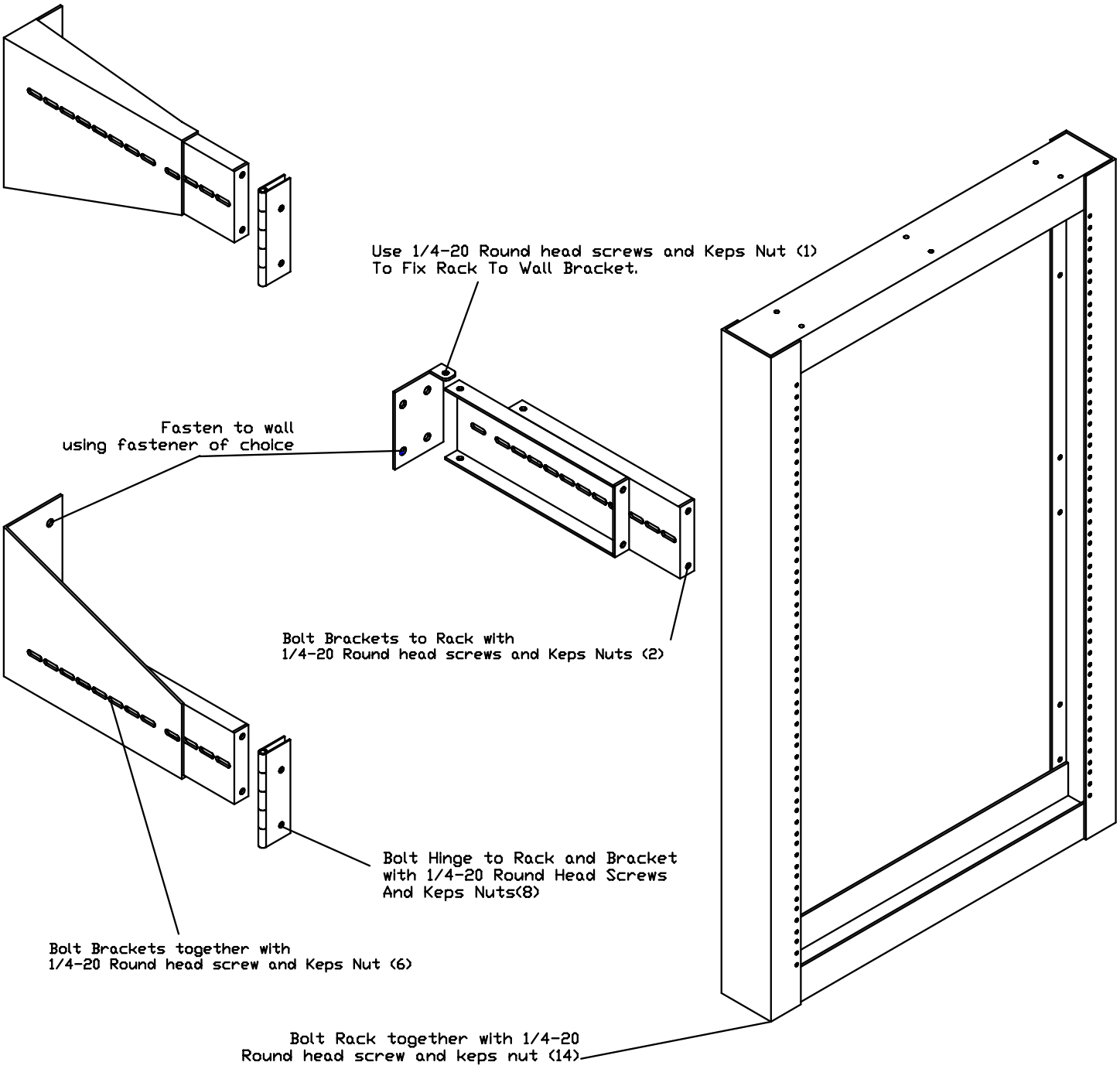
MOUNTING INSTRUCTIONS:
WALL MOUNT FIXED RACK
RFM-1920-RWS-ADJ